Euro Profile - Double Cylinder
215 Series

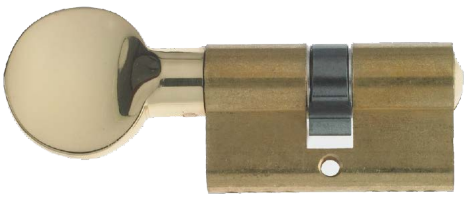

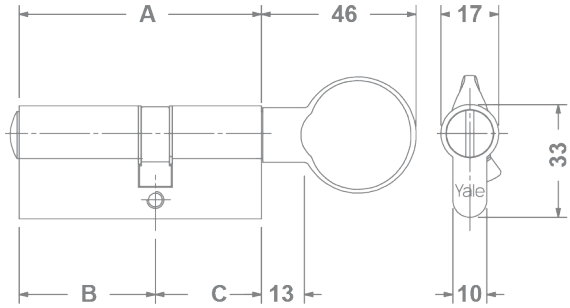

CODE	A	B	C
2150054	54	27	27
2150058	58	27	31
2150062	62	31	31
2150069	70	43	27
2150070	70	27	43
2150071	70	35	35
2150075	74	31	43